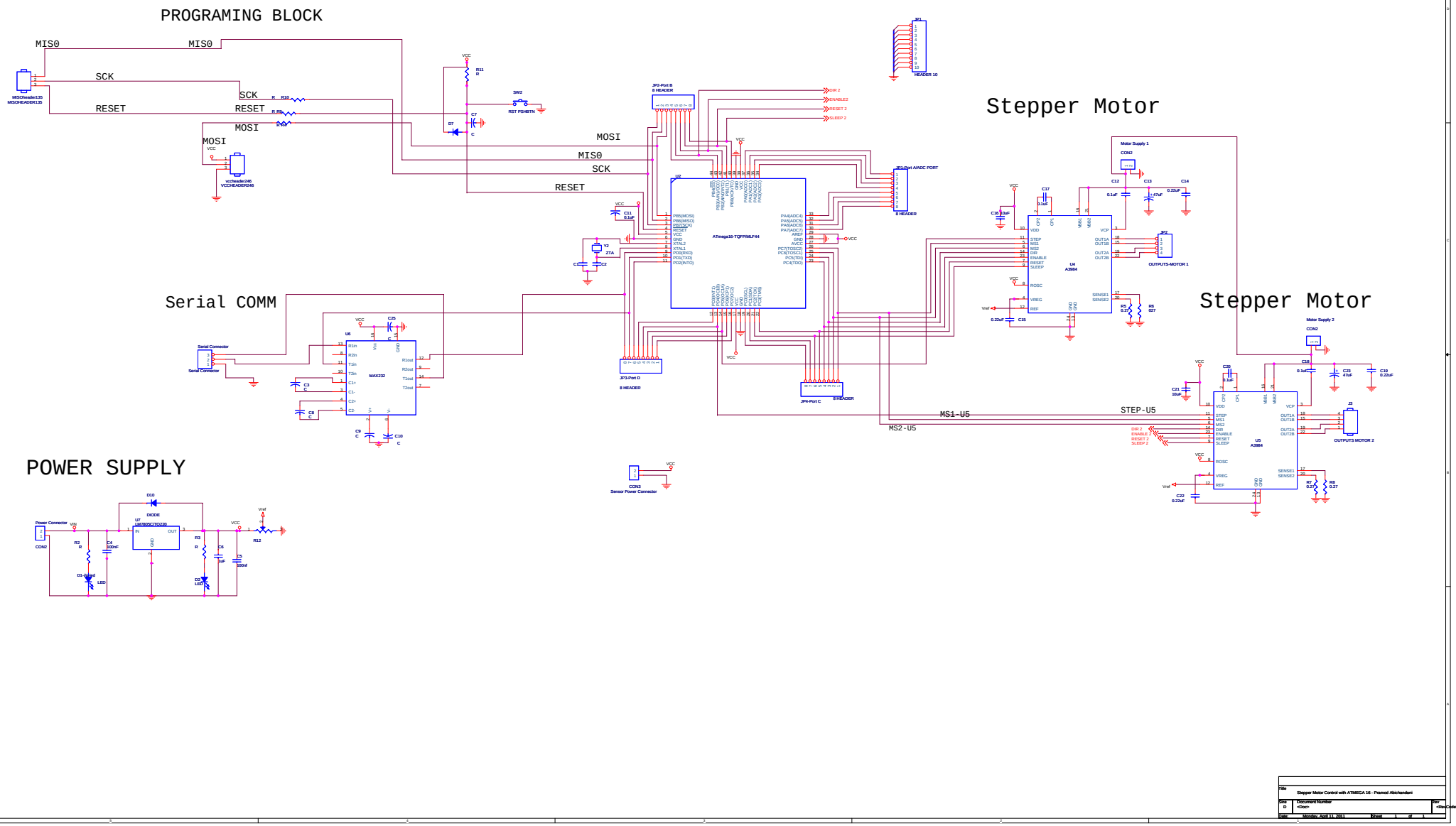
PROGRAMING BLOCK
MIS0
MIS0
SCK
SCK
RESET
RESET
MOSI
MOSI
MSCHeader135
MSCHEADER135
vccheader246
VCCHEADER246
R10
R9
R11
SW2
RST PSHBTN
D7
C7
JP2-Port B
8 HEADER
JP1-Port A/ADC PORT
8 HEADER
U2
ATmega16-TQFP/MLF44
Y2
Z7A
C11
0.1uF
C1
C2
JP3-Port D
8 HEADER
JP4-Port C
8 HEADER
HEADER 10
Stepper Motor
Motor Supply 1
CON2
C12
0.1uF
C13
47uF
C14
0.22uF
C16
10uF
C17
0.1uF
U4
A3984
JP2
OUTPUTS-MOTOR 1
R5
0.27
R6
0.27
C15
0.22uF
Vref
Serial COMM
Serial Connector
U6
MAX232
C25
C3
C8
C9
C10
Stepper Motor
Motor Supply 2
CON2
C18
0.1uF
C23
47uF
C19
0.22uF
C20
0.1uF
C21
10uF
U5
A3984
J1
OUTPUTS MOTOR 2
R7
0.27
R8
0.27
C22
0.22uF
MS1-U5
MS2-U5
STEP-U5
DIR 2
ENABLE 2
RESET 2
SLEEP 2
CON3
Sensor Power Connector
POWER SUPPLY
Power Connector
CON2
D10
DIODE
U7
LM7805CT/TO220
R2
R
C4
100nF
D11
LED
R3
R
C6
1uF
D12
LED
C5
100nF
R12
Vref
VCC
Title
Stepper Motor Control with ATMEGA 16 - Pramod Alachandani
Size
D
Document Number
<Doc>
Rev
<Rev>
Date:
Monday, April 11, 2011
Sheet
1
of
1